Work Order ID 65655

January 21, 2011 10:56:01 AM

Item ID: D4185-11
Revision ID: PRELIM
Item Name: Idle Stop Limiter

Accept

Setup Start
Stop

Start Date: 1/21/11 **Start Qty:** 2.00
Required Date: 2/04/11 **Req'd Qty:** 2.00
Reference:

Cust Item ID:
Customer:

Run Start
Stop

Approvals: **Process Plan:** CL **Date:** 11/01/21 **Tooling:** _____ **Date:** _____
QC: _____ **Date:** _____ **SPC (Y/N):** _____ **Date:** _____

Sequence ID/ Work Center ID	Operation Description	Set Up/ Run Hours	Tool ID	Tool #	Plan Code	Accept Qty	Reject Qty	Reject Number	Insp. Stamp
Draw Nbr / **Revision Nbr**									
D4185	~~PA1~~ ~~PA2~~ ~~PA3~~ 11.01.21								
100		0.00							
Bandsaw	PA7								
Jeaspa Bandsaw	**Memo** CUT BLANK .5" LONG	0.00				2	0		
110		0.00							
HAAS 1						2	Ø		
HAAS CNC vertical machine #1	**Memo** MILL AS PER DWG AND FOLIO FB021 FOLIO REV: AA DWG REV: PA3 2-DEBURR	0.00							

11/02/08

POSITIVE RECEIVED

MATERIAL CERTIFICATION REQ'D UPON DELIVERY

PRELIMINARY ISSUE

Dart Aerospace Ltd

W/O:		WORK ORDER CHANGES					
DATE	STEP	PROCEDURE CHANGE	By	Date	Qty	Approval Chief Eng / Prod Mgr	Approval QC Inspector

Part No: _____ **PAR #:** _____ **Fault Category:** _____ **NCR:** Yes No **DQA:** _____ **Date:** _____

Resolution: _____ **Disposition:** _____ **QA: N/C Closed:** _____ **Date:** _____

NCR:		WORK ORDER NON-CONFORMANCE (NCR)						
DATE	STEP	Description of NC Section A	Corrective Action Section B			Verification Section C	Approval Chief Eng	Approval QC Inspector
			Initial Chief Eng	Action Description Chief Eng	Sign & Date			

NOTE: Date & initial all entries

Work Order ID 65655

January 21, 2011 10:56:01 AM

Item ID: D4185-11
Revision ID: PRELIM
Item Name: Idle Stop Limiter

Accept

Setup Start
Stop

Start Date: 1/21/11 **Start Qty:** 2.00
Required Date: 2/04/11 **Req'd Qty:** 2.00
Reference:

Cust Item ID:
Customer:

Run Start
Stop

Approvals: **Process Plan:** _____ **Date:** _____ **Tooling:** _____ **Date:** _____
QC: _____ **Date:** _____ **SPC (Y/N):** _____ **Date:** _____

Sequence ID/ Work Center ID	Operation Description	Set Up/ Run Hours	Tool ID	Tool #	Plan Code	Accept Qty	Reject Qty	Reject Number	Insp. Stamp
120	QC2- Inspect parts off machine FAI/FAIB	0.00							
QC	Memo	0.00	B.A	11/02/08		2	ϕ		
Quality Control									
130	QC8- Inspect parts - second check	0.00	SL 11/02/22						
QC	Memo	0.00							
Quality Control									
140	Identify as per dwg & Stock Location:_____	0.00							
Packaging	Memo	0.00							
Packaging									

Dart Aerospace Ltd

W/O:		WORK ORDER CHANGES					
DATE	STEP	PROCEDURE CHANGE	By	Date	Qty	Approval Chief Eng / Prod Mgr	Approval QC Inspector

Part No: _____ **PAR #:** _____ **Fault Category:** _____ **NCR:** Yes No **DQA:** _____ **Date:** _____

Resolution: _____ **Disposition:** _____ **QA: N/C Closed:** _____ **Date:** _____

NCR:		WORK ORDER NON-CONFORMANCE (NCR)						
DATE	STEP	Description of NC Section A	Corrective Action Section B			Verification Section C	Approval Chief Eng	Approval QC Inspector
			Initial Chief Eng	Action Description Chief Eng	Sign & Date			

NOTE: Date & initial all entries

H:\FORMS\Quality Assurance\approved QA\NCRWO RevE

Work Order ID 65655

January 21, 2011 10:56:01 AM

Item ID: D4185-11
Revision ID: PRELIM
Item Name: Idle Stop Limiter

Accept

Setup Start
Stop

Start Date: 1/21/11 **Start Qty:** 2.00
Required Date: 2/04/11 **Req'd Qty:** 2.00
Reference:

Cust Item ID:
Customer:

Run Start
Stop

Approvals: **Process Plan:** _____ **Date:** _____ **Tooling:** _____ **Date:** _____
QC: _____ **Date:** _____ **SPC (Y/N):** _____ **Date:** _____

Sequence ID/ Work Center ID	Operation Description	Set Up/ Run Hours	Tool ID	Tool #	Plan Code	Accept Qty	Reject Qty	Reject Number	Insp. Stamp
150	QC21- Final Inspection - Work Order Release	0.00							
QC Quality Control	**Memo**	0.00							

PS 11-06-9
(2)
Eagle

POSITIVE RECALL
EFFECTIVE 11-01-21 AUTH th
RELEASED _____ DATE _____

PRELIMINARY ISSUE

Dart Aerospace Ltd

W/O:		WORK ORDER CHANGES					
DATE	STEP	PROCEDURE CHANGE	By	Date	Qty	Approval Chief Eng / Prod Mgr	Approval QC Inspector

Part No: _____ **PAR #:** _____ **Fault Category:** _____ **NCR:** Yes No **DQA:** _____ **Date:** _____

Resolution: _____ **Disposition:** _____ **QA: N/C Closed:** _____ **Date:** _____

NCR:		WORK ORDER NON-CONFORMANCE (NCR)						
DATE	STEP	Description of NC Section A	Corrective Action Section B			Verification Section C	Approval Chief Eng	Approval QC Inspector
			Initial Chief Eng	Action Description Chief Eng	Sign & Date			

NOTE: Date & initial all entries

Picklist Print

January 21, 2011 10:56:01 AM

Work Order ID: 65655

Parent Item: D4185-11

Parent Item Name: Idle Stop Limiter

Start Date: 1/21/11 **Required Date:** 2/04/11

Start Qty: 2.00 **Required Qty:** 2.00

Comments: IPP REV:A NEW ISSUE 11-01-20 JLM VERIFIED BY:DD

Component Item ID/ Item Name	Replacement Item ID	Mfg/ Purch	Bin Item	Primary Location	Last Location	Route Seq ID	Unit of Measure	Qty on Hand	Qty per Kit	Total Qty	Qty Issued	Date Issued	Status
MDELRINB0.75X1.250 Delrin Bar		Purchased	No			100	f	22.7524	0.042	0.088421			

Location	Loc Qty	Loc Code
MAT050	22.7524	
14535	22.7524	

.088 [illegible] 1/02/08

Dart Aerospace Ltd

W/O:		WORK ORDER CHANGES					
DATE	STEP	PROCEDURE CHANGE	By	Date	Qty	Approval Chief Eng / Prod Mgr	Approval QC Inspector

Part No: _____ **PAR #:** _____ **Fault Category:** _____ **NCR:** Yes No **DQA:** _____ **Date:** _____

Resolution: _____ **Disposition:** _____ **QA: N/C Closed:** _____ **Date:** _____

NCR:		WORK ORDER NON-CONFORMANCE (NCR)						
DATE	STEP	Description of NC Section A	Corrective Action Section B			Verification Section C	Approval Chief Eng	Approval QC Inspector
			Initial Chief Eng	Action Description Chief Eng	Sign & Date			

NOTE: Date & initial all entries

H:\FORMS\Quality Assurance\approved QA\NCRWO RevE

DART AEROSPACE LTD	Work Order:	65655
Description: IDLE STOP LIMITER	Part Number:	D4185-11
Inspection Dwg: D4185 , Rev: ~~DA3~~ DA7 11.02.23		Page 1 of 1

FIRST ARTICLE INSPECTION CHECKLIST

[X] First Article [X] Prototype

Drawing Dimension	Tolerance	Actual Dimension	Accept	Reject	Method of Inspection	Comments
0.21	+/-.030	0.210	✓		Vern	GA-01
0.17	+/-.030	0.170	✓		"	"
0.25	+/-.030	0.250	✓		"	"
0.35	+/-.030	0.345	✓		"	"
0.10	+/-.030	0.100	✓		"	"
0.32	+/-.030	0.317	✓		"	"
0.14	+/-.030	0.134	✓		"	"
0.55	+/-.030	0.549	✓		"	"
0.21	+/-.030	0.206	✓		"	"
0.11	+/-.030	0.106	✓		"	"
0.28	+/-.030	0.275	✓		"	"
ϕ0.125	+.004/-.001	ϕ0.125	✓		"	"

Measured by:	JA
Date:	11/02/08

Audited by:	JL
Date:	11/02/22

Prototype Approval:	
Date:	

Rev	Date	Change	Revised by	Approved
A		New Issue	KJ/JLM	

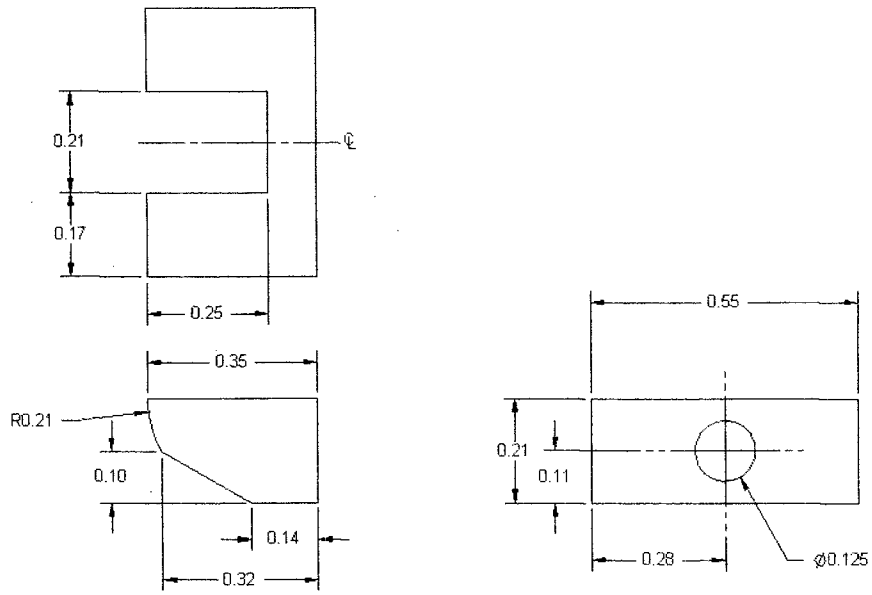

D4185-11 IDLE STOP LIMITER

NOTES:
1) MATERIAL: BLACK DELRIN II 150E OR ACETRON GP ACETAL
REF DART SPEC M-DELRIN-B
2) FINISH: N/A
3) TOLERANCES: PER DART QSI 018 UNLESS OTHERWISE NOTED
4) UNITS: INCHES UNLESS OTHERWISE NOTED
5) BREAK SHARP EDGES: 0.005 TO 0.010 MAX
6) IDENTIFICATION: N/A
7) WEIGHT: 0.00 lbs

PRELIMINARY ISSUE
10.11.12

DESIGN		DART AEROSPACE LTD HAWKESBURY, ONTARIO, CANADA
DRAWN		
CHECKED		DRAWING NO. D4185 — REV. PA7 — SHEET 7 OF 9
MFG. APPR.		
APPROVED		TITLE: INTERNAL BELLCRANK — SCALE: NTS
DE APPR.		
DATE 10.11.12		

COPYRIGHT © 2010 BY DART AEROSPACE LTD
THIS DOCUMENT IS PROPRIETARY AND CONFIDENTIAL AND IS SUPPLIED ON THE EXPRESS CONDITION THAT IT IS NOT TO BE USED FOR ANY PURPOSE OR COPIED OR COMMUNICATED TO ANY OTHER PERSON WITHOUT WRITTEN PERMISSION FROM DART AEROSPACE LTD.

Receiving Report

Date: 04-03-01
Supplier: Cadillac Plastics

Batch No: m 14535
Dart P/O: 20006130

Packing Slip: Yes ✓ No ___
Invoice: Yes ___ No ✓
Receipt: Cash ___ Cr. ___

Release Note Attached: Yes ✓ No ___ N/A ___
Waybill Attached: Yes ✓ No ___
Shipment Complete: Yes ___ No ✓
Q.C. Inspection [illegible] 03-02

Discrepancies

Part No.	Desription	Quantity Ordered	Quantity Received	Quantity Returned	Quantity Short	Comments
m-DELRIN-R1.25RD	Delrin Round Bar 1.25	48	8		40	

TSR No. _____

Initials of receiver (if shipment OK) [illegible]

Production/Admin:
Date 04.03.01
Received/Costing 26130
Initial [illegible]

Accounting:
Date _____
AP/MR _____
Initial _____

H:\ISO9000\Forms\Purchase\RECREPORT rev B

04-03-01

Purchase Order

PO Number 2006130
Date 02-23-04
Account # QSI012-6100

Vendor
Cadillac Plastics(GE Polymer)
1250 Old Innes Rd. Unit 519
OTTAWA ONT
Canada K1B 5L3

Sold To
Dart Aerospace Ltd.
1270 Aberdeen St.
Hawkesbury ON
Canada K6A 1K7

Ship To
S A M E

FAXED 04.02.23

Attn PAUL HAMILTON
Vendor Tel (800) 267-1575
Vendor Fax (613) 745-4291

Purchaser
Telephone (613) 632-3336
Fax (613) 632-4443

Ship Via TRUCK
FOB Point ORIGIN
Freight Chgs PrePay

GST # RT101272607 PST # 61225207 OE # 0000WIP
Comments: MATERIAL CERTIFICATION REQUIRED UPON DELIVERY

Amt	Manuf	Mfg Part No	Our Part Number	Part Description	Delivery	Unit Price	Extended
144.00		Rec'd 04-03-01	M-DELRIN-B0.75x1.250	Delrin Bar	02-27-04	6.6250 /f	954.00
		DELRIN II 150E OR ACETRON GP GP ACETAL BLACK					
48.00		Rec'd 8	M-DELRIN-R1.2500	DELRIN ROUND BAR 1.25"	02-27-04	6.2500 /f	300.00
		DELRIN II 150E OR ACETRON GP ACETAL BLACK					

Total Value of Purchase Order **$1,254.00**

04.02.23